DWE305PK CUTSAW 1

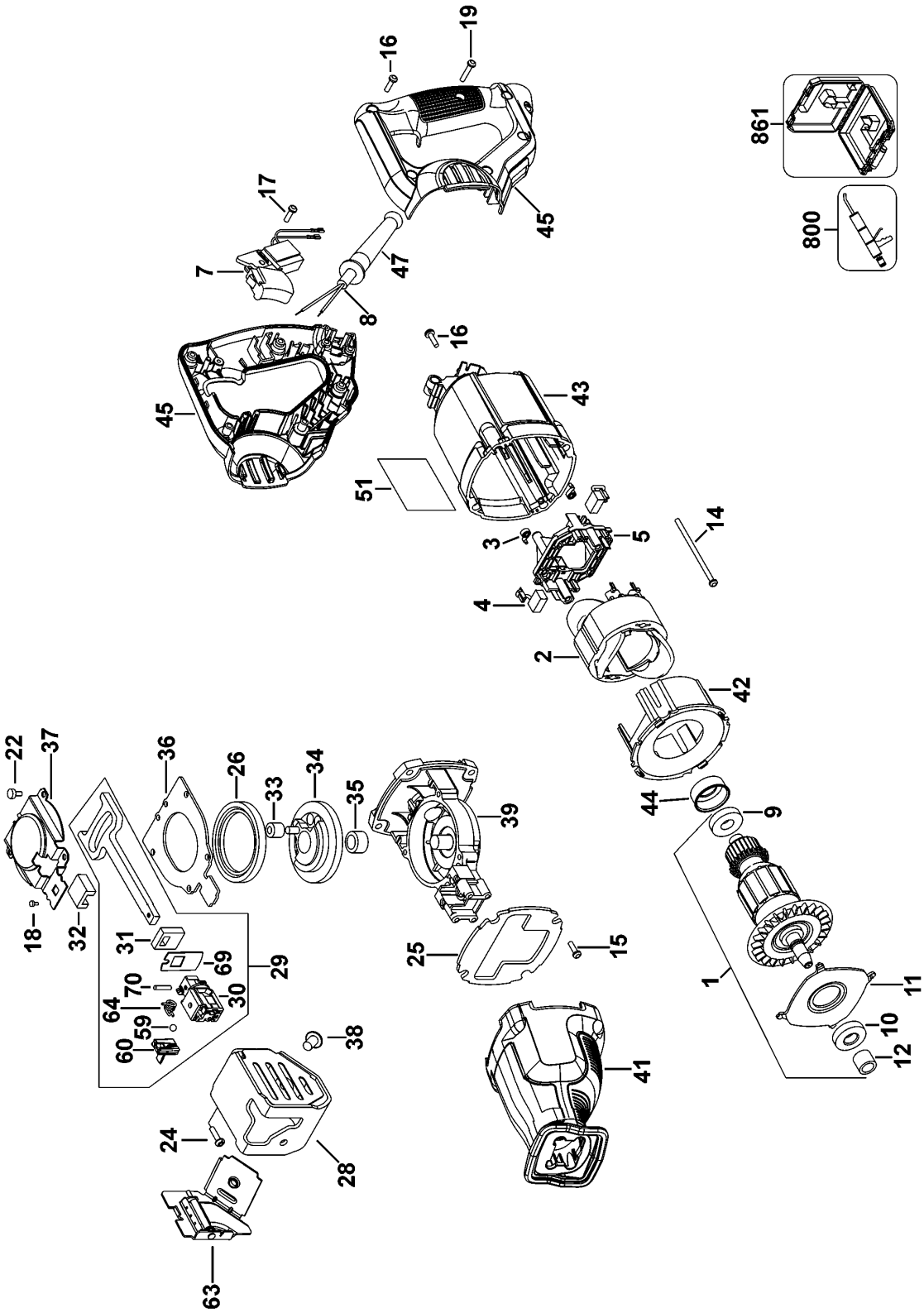

©