Model No. DML800 RECHARGEABLE FLASHLIGHT

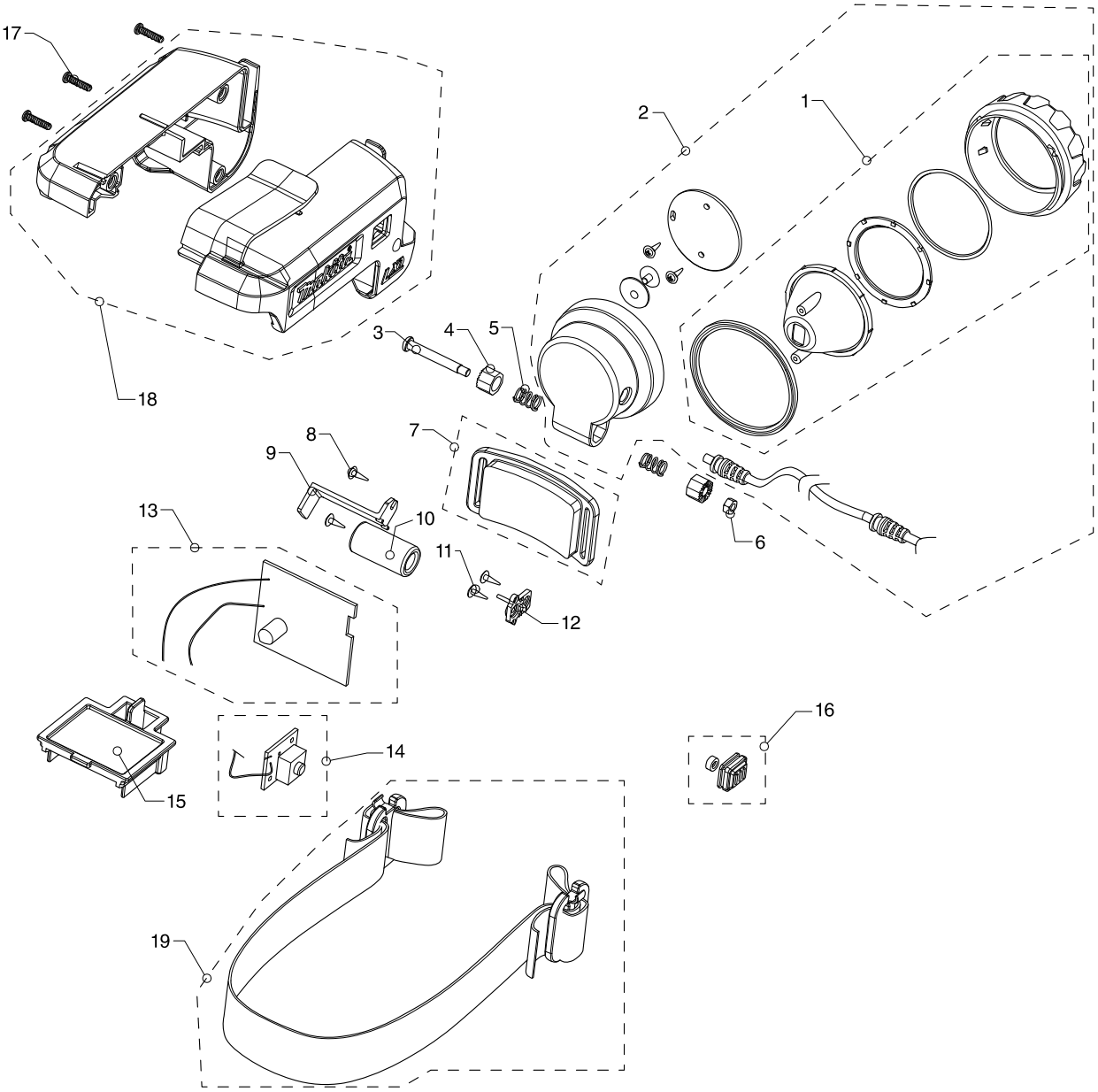

Model No. DML800 RECHARGEABLE FLASHLIGHT

Item	Parts No.	Description	I/C	Qty	N/O	Opt. 1	Opt. 2	Note
001	GM00001223	LAMP HD FRONT ASSY ROS28009800		1				
002	GM00001210	LAMP HEAD ASSY ROS28009801		1				
003	GM00001224	SCREW 3.5X30 PM B0135300004		1				
004	GM00001225	ANGLE LOCK C4120800002		2				
005	GM00001226	SPRING B1303800920		2				
006	GM00001227	HEX. NUT B0203020000		1				
007	GM00001228	BELT CLIP ASSY ROS28009802		1				
008	GM00001229	SCREW 2.3X8 PWB B0123080706		2				
009	GM00001230	HOLDER FOR FERRITE C4120800003		1				
010	GM00001231	MAGNET RING A2301005700		1				
011	GM00001229	SCREW 2.3X8 PWB B0123080706		2				
012	GM00001233	CABLE GUARD C0120800007		1				
013	GM00001234	MAIN CIRCUIT ROS28009803		1				
014	GM00001235	SWITCH CIRCUIT ROS28009804		1				
015	GM00001117	BATTERY HOLDER C2010239007		1				
016	GM00001236	SWITCH COVER ASSY ROS28009805		1				
017	GM00001189	SCREW 3X12BB (B0130120712)		3				
018	GM00001237	BODY ASSY ROS28009806		1				
019	GM00001238	RUBBER BAND ASSY ROS28009807		1	*			
019-1	GM00001380	SILICON BAND ASSY ROS28009808	O	1				

Please order the parts with a part number.

Print Date 16/02/2018